Fingersafe panel with ribbed outer sheet
Available in heigths 500 and 610mm.
Inner sheet : ribbed, stucco embossed, RAL 9010.

PANEL KL

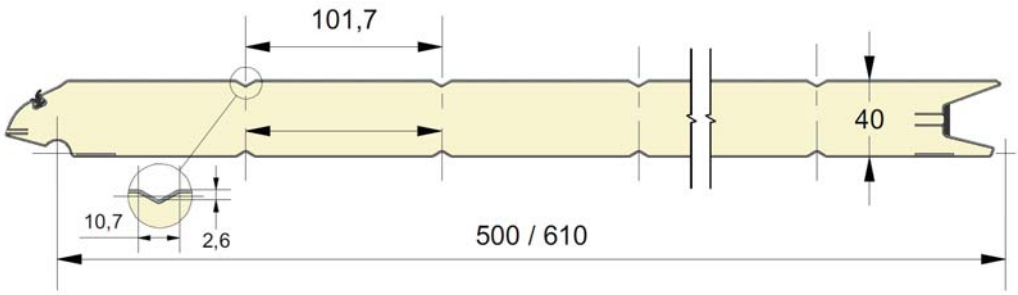

REFERENCE	HEIGHT	EMBOSSING
1507	500	Smooth
1508	610	Smooth
1509	500	Woodgrain
1510	610	Woodgrain
1511	500	Stucco
1512	610	Stucco

COLORS

	9010	9016 P	7016 P	7016 M	7039 M	8014 P	9006	Golden Oak	Dark Oak
500	○+	●*	●	○*	○*	○	○+	○	○
610	○+	●*	●	○*		○	○+	○	○

● = Standard ○ = Option (min. 100 m²) * = Only in smooth + = Except in smooth

EMBOSSING

EPCO
YOUR NEEDS. OUR PANELS.

Fingersafe panel with single grooved outer sheet
Available in heights 500 and 610mm with groove centered, up or down.
Inner sheet ribbed, stucco embossed, RAL 9010.

PANEL LU

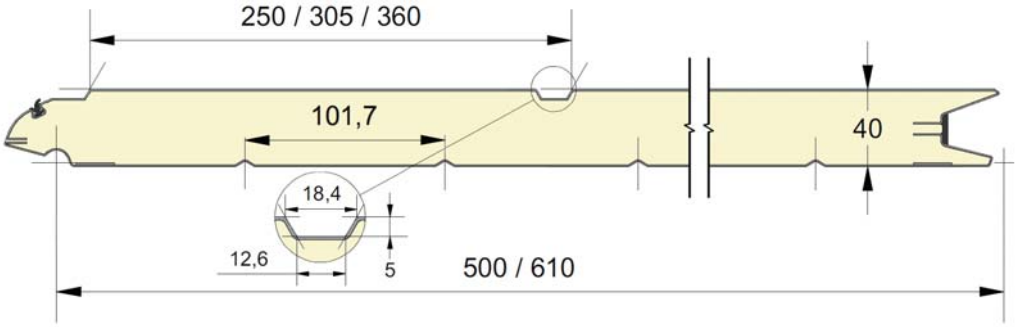

REFERENCE	HEIGHT	EMBOSSING
1607	500	Smooth
1608	610 CN	Smooth
1609	610 UP	Smooth
1610	610 DN	Smooth
1611	500	Woodgrain
1612	610 CN	Woodgrain
1613	610 UP	Woodgrain
1614	610 DN	Woodgrain
1615	500	Stucco
1616	610 CN	Stucco
1617	610 UP	Stucco
1618	610 DN	Stucco

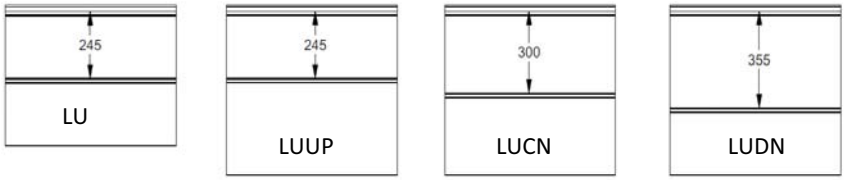

COLORS

	9010	9016 P	7016 P	7016 M	7039 M	8014 P	9006	Golden Oak	Dark Oak
500	○+	●*	●	○*	○*	○	○+	○	○
610	○+	●*	●	○*		○	○+	○	○

EMBOSSING

● = Standard ○ = Option (min. 100 m²) * = Only in smooth + = Except in smooth

EPCO
YOUR NEEDS. OUR PANELS.